Black Swift S2 UAS

A Purpose-Built Volcanic Research Platform

A Purpose-Built Volcanic Research Platform

The Black Swift S2™ UAS is a purpose-built aerial platform for flying scientific payloads in demanding atmospheric environments near active volcanoes (high-altitude, corrosive particulates, and strong turbulence). The Black Swift S2 UAS offers the additional benefits of having a larger payload capacity than other vehicles while also having longer endurance, higher ceiling, and greater range than vector wing airframes. This rugged airframe is capable of autonomous launch, flight, and landing in difficult mountainous regions.

Engineered to achieve high altitude flights through strong winds and damaging particulates, the Black Swift S2 UAS is a durable, terrain-following UAS platform capable of flying over the forest canopy near an active volcano to measure and monitor the prevalence of volcanic gases like CO_2 emitted from the vents and fractures of active volcanoes.

Modular Field-Swappable Payload System

Indicative of its science-based missions and flight heritage, the Black Swift S2 UAS features the field-swappable payload system designed to:

1. Ensure clean and uncontaminated measurements of the atmosphere by completely enclosing the sensor suite and associated hardware within the nose cone, and

2. Enable rapid changes of the payload in the field using a common power, data, and mechanical interface without any specialized tools. This allows for at-altitude field calibration and different sensor suites to be rapidly deployed in successive missions using the same airframe and FMS, extending the utility of the Black Swift S2 UAS to numerous applications and missions outside that of airborne CO_2 data analysis.

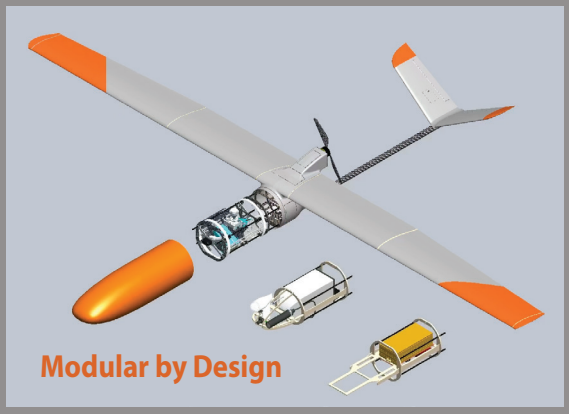

Modular by Design

Black Swift TECHNOLOGIES
3200 VALMONT ROAD, STE 7
BOULDER, COLORADO 80301
720 638 9656
info@BlackSwiftTech.com

Modular by Design, Accurate by Nature™

A Purpose-Built Volcano Research Platform

BlackSwift S2 UAS

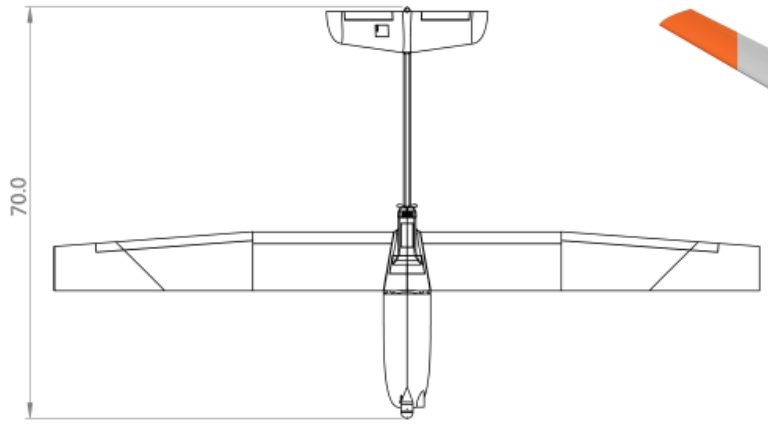

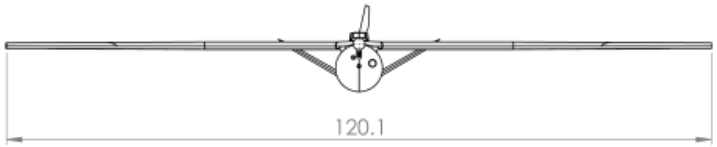

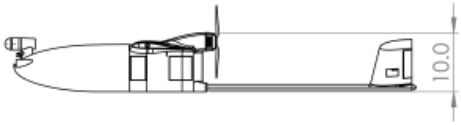

in Inches

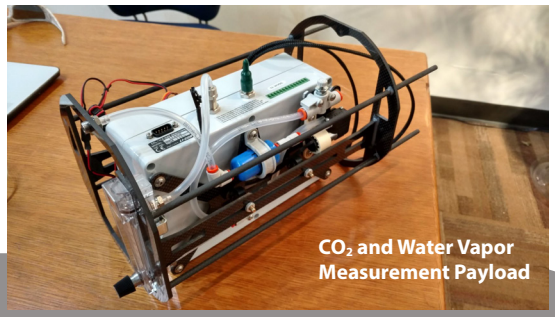

LI-840 Sensor Specifications

CO2 Measurements

- Measurement range: 0-20,000 ppm
- Accuracy: Within 1.5% of reading
- Calibration Drift
  - Zero Drift1: <0.15 ppm/°C
  - Span Drift2: <0.03%/°C
  - Total Drift at 370 ppm3: <0.4 ppm/°C
- RMS noise at 370 ppm with 1 sec signal filtering: <1 ppm
- Sensitivity to water vapor (LI-850 only): <0.1 ppm CO2/mmol mol-1 H2O
- Lower limit of detection 1.5 ppm

H2O Measurements

- Measurement range: 0-60 mmol mol-1
- Accuracy: Better than 1.5% of reading
- Calibration drift
  - Drift at 0 mmol mol-1: <0.003 mmol mol-1/°C
  - Span drift at 10 mmol mol-1: <0.03% mmol mol-1/°C
  - Total drift at 10 mmol mol-1: <0.009 mmol mol-1/°C
- RMS noise at 10 mmol mol with 1 sec signal filtering: <0.01 mmol mol-1
- Sensitivity to CO2: <0.0001 mmol mol-1 H2O/ppm CO2

When Time is of the Essence

Leveraging BST's proprietary Flight Planning User Interface, scientists can program the Black Swift S2 UAS in minutes to calculate the area under review and then begin collecting data for immediate analysis and decision making. With its intuitive tab-driven interface, flight planning is simple and easy to accomplish. Mission monitoring and mapping is all done from a handheld Android™ Tablet loaded with BST's SwiftTab™ software. Gesture-based controls enable users to confidently deploy their Black Swift S2 UAS with minimal training while being able to collect data over geography that is topically diverse with confidence.

The Black Swift S2 UAS has successfully collected science data flying in full payload configuration in extreme environments (tropical volcanoes, arctic permafrost, high alpine ranges) for NASA and NOAA deployments.

Specifications

Mission Capabilities	
Ingress Protection (IP)	IP42
Payload Wieght vs Launch	1.4 kg (3 lbs) hand launch 2.3 kg (5 lb) rail launch
Flight Ceiling	6000 m (20,000 ft)
Max. Winds Endured	15 m/s (30 kts)
Flight Characteristic (6,000 ft density alt)	
Flight Speed	12 m/s (24 kts) stall, 18 m/s (35 kts) cruise
Flight Time	110 min max, 90 min nominal
Range	110 km (60 nm) max, 92 km (50 nm) nominal
Vehicle Characteristic	
Weight	5.2 kg (11.5 lbs) nomoinal, 6.6 kg (14.5 lbs) max
Wingspan	3.0 m (10.0 ft)
Payload Capacities	
Nose Cone Dimensions	20.3 cm (8 in) diameter 63.2 cm (24.9 in) length
Power available for payload	50 W total
Payload weight	2.3 kg (5 lbs) max w/ rail launch
Geotagging Position Accuracy	Typically < 4m in all directions
Telemetry Data Rate	Serial Stream, 9500 bps

BlackSwift TECHNOLOGIES
3200 VALMONT ROAD, STE 7
BOULDER, COLORADO 80301
720 638 9656
info@BlackSwiftTech.com

Modular by Design, Accurate by Nature™